NEPTUN LIGHT

LED
ROUND STEP-LIGHT FIXTURES
SURFACE MOUNT

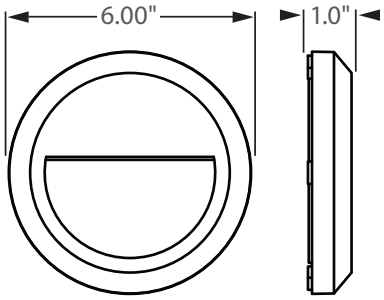

Incredible 75,000 hrs

GENERAL DESCRIPTION

Neptun's LED rectangle step-light fixtures feature architectural design and durability to fit new construction and retrofit applications. The LED-ST57 series features a slim design and is surface mounted for easy installation.

APPLICATION

- Building Accent Lighting
- Landscape Lighting
- Security Lighting
- Step Light Lighting

STRUCTURE, MATERIALS, & FEATURES

- Die-cast aluminum housing.
- High efficiency, heat and impact resistant, UV protected, non yellowing polycarbonate lens / refractor.
- Corrosion resistant electrocoat grey or black finish.
- Continuous silicone gasketing surrounds lens for weather - tight seal.
- High Output LED's.
- High power factor, low THD driver with 10kV Surge Protection.
- InstantON flicker-free Cold Start and Hot Re-Start.
- Up to 15 years Maintenance free operation.
- 5 Year Warranty on complete fixture. (LED's, Driver, & Housing)

ORDERING INFORMATION

Sample Number: LED-ST57001-120V-850-BLK
Custom options and accessories available. Please consult factory

Series	Wattage	Voltage	Color Temp	Color
LED-ST57 = Step-Light	**001** = 1 W	**120V** = 120-265 VAC	**835** = 3500°K **841** = 4100°K **850** = 5000°K	**BLK** = Black **GRY** = Grey * Custom Colors Available

LEAD FREE RoHS COMPLIANT

lightinnovations@work™

NEPTŪN LIGHT

LED
ROUND STEP-LIGHT FIXTURES
SURFACE MOUNT

PRODUCT INFORMATION

Model No.	Description	Rated Watts	Input Watts	Initial Lumens	Line Voltage (VAC)	Max Line Current (Amp) @ 120VAC	THD	Power Factor	Weight
LED-ST57001-120V	LED Step-Light Fixture	1	1.2	90	120-265	0.008	<15%	>0.90	1 lbs

SPECIFICATIONS

- Driver ..... Constant Current
- Start Method ..... InstantON
- Hot Re-start ..... InstantON
- Power Supply 350mA
- Driver UL Rating ..... Class 1
- Driver UL Outdoor Rated ..... Wet Location
- Sound Rating ..... Class A
- ANSI Surge Protection ..... IEEE C62.41 C High
- Driver Off-State Draw ..... 0 Watts
- Input Line Voltage ..... 120-265 VAC
- Input Line Frequency ..... 50/60 Hz
- LED / Driver System Life ..... 75,000 Hrs.
- Lumen Maintenance @50,000Hrs ..... > 70%
- Color Temperature ..... 5,000°K
- Color Rendering Index (CRI) ..... > 80
- Minimum Starting Temperature ..... -40°C
- Maximum Starting Temperature ..... +50°C
- Lumens per Watt ..... > 60
- Shock / Vibration Resistant ..... Yes
- Power Factor ..... > 0.90
- Total Harmonic Distortion ..... < 15%
- Inrush Current Peak ..... < 10 Amp
- FCC Compliance ..... Part 15, Subp. C
- Housing IP Rating IP65
- Warranty ..... 5 Year

SURFACE MOUNT - SLIM DESIGN

Neptun Light, Inc. reserves the right to change materials or modify the design of its product without notification as part of the company's continuing product improvement program.
©2002-2013 Neptun Light, Inc. All rights reserved.