NEPTŪN LIGHT

LED
BULK HEAD FIXTURES

** AVAILABLE **
0 - 10V
FULL DIMMING

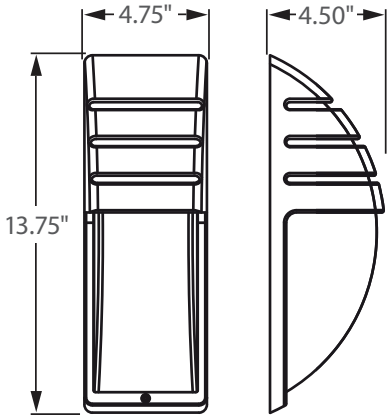

Incredible 75,000 hrs

GENERAL DESCRIPTION

Neptun's LED wall mount fixtures feature architectural design and durability to fit new construction and retrofit applications. The LED-72 series feature high output LED's and custom engineered optics to provide excellent uniformity and efficiency. They can replace existing HID & HPS fixtures up to 50W.

APPLICATION

- Building Accent Lighting
- Landscape Lighting
- Security Lighting
- Area Lighting
- Stairwell Lighting
- Passageway Lighting

STRUCTURE, MATERIALS, & FEATURES

- Die-cast aluminum housing.
- High efficiency, heat and impact resistant, UV protected, non yellowing polycarbonate lens / refractor.
- Corrosion resistant electrocoat bronze finish (custom colors available).
- Continuous silicone gasketing surrounds lens for weather - tight seal.
- Correlated Color Temperature of (5000°K) for greater visibility and safety.
- High Output COB LED's.
- High power factor, low THD driver with 10kV surge Protection.
- InstantON flicker-free Cold Start and Hot Re-Start.
- Up to 15 years Maintenance free operation.
- 5 Year Warranty on complete fixture. (LED's, Driver, & Housing)
- **Optional**: 0-10V Dimming, Remote Monitoring and ON/ OFF Control, DC 24V Operation - Solar Compatible

ORDERING INFORMATION

Sample Number: LED-72015-UNV-0-10VDIM-850-BRZ
Custom options and accessories available. Please consult factory

Series	Wattage	Voltage	Options	Color Temp	Color
LED-72 = Wall Mount	**015** = 15 W	**UNV** = 120-277 VAC **24VDC** = 24V DC	**0-10VDIM** = 0-10V Dimming * Contact Factory for dimming options	**835** = 3500°K **841** = 4100°K **850** = 5000°K * * Standard	**BRZ** = Dark Bronze * Custom Colors Available

LEAD FREE RoHS COMPLIANT

lightinnovations@work™

NEPTŪN LIGHT

LED
BULK HEAD FIXTURES

PRODUCT INFORMATION

Model No.	Description	Rated Watts	Input Watts	Initial Lumens	Universal Line Voltage (VAC)	Max Line Current (Amp) @ 120 - 277	THD	Power Factor	Weight
LED-72015-UNV	LED Wall Mount Fixture	15	16	1,200	120-277	0.11-0.05	<20%	>0.90	3 lbs

SPECIFICATIONS

- Driver ..... Constant Current
- Start Method ..... InstantON
- Hot Re-start ..... InstantON
- Power Supply 350mA
- Driver UL Rating ..... Class 1
- Driver UL Outdoor Rated ..... Wet Location
- Sound Rating ..... Class A
- ANSI Surge Protection ..... IEEE C62.41 C High
- Driver Off-State Draw ..... 0 Watts
- Universal Input Line Voltage ..... 120-277 VAC
- Input Line Frequency ..... 50/60 Hz
- LED / Driver System Life ..... 75,000 Hrs.
- Lumen Maintenance @50,000Hrs ..... > 70%
- Color Temperature ..... 5,000°K
- Color Rendering Index (CRI) ..... > 80
- Minimum Starting Temperature ..... -40°C
- Maximum Starting Temperature ..... +50°C
- Lumens per Watt ..... > 75
- Shock / Vibration Resistant ..... Yes
- Power Factor ..... > 0.90
- Total Harmonic Distortion ..... < 20%
- Inrush Current Peak ..... < 10 Amp
- FCC Compliance ..... Part 15, Subp. C
- Housing IP Rating IP65
- Driver IP Rating IP67
- Warranty ..... 5 Year

MOUNTING OPTIONS

Surface Mount

Neptun Light, Inc. reserves the right to change materials or modify the design of its product without notification as part of the company's continuing product improvement program.
©2002-2013 Neptun Light, Inc. All rights reserved.