NEPTUN LIGHT

LED
ARCHITECTURAL POST-TOP AREA FIXTURES

Dark Sky FRIENDLY

** AVAILABLE **

Bi-Level 100% | Dimming 50%

0 - 10V FULL DIMMING

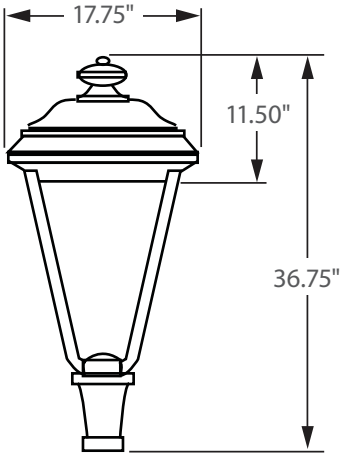

Incredible 75,000 hrs

GENERAL DESCRIPTION

Neptun's LED Round Post-Top fixture combines a slim architectural form and versatility to make it an excellent choice for new construction or retrofit applications. The LED-835 series post-top fixture is offered in a variety of wattages to provide maximum flexibility in all types of applications. It can replace existing HID & HPS fixtures up to 250W.

APPLICATION

- Parking Lot Lighting
- Car Lot Lighting
- Area & Storage Lighting
- Street Lighting
- Walkway Lighting

STRUCTURE, MATERIALS, & FEATURES

- Heavy-gauge, die-cast aluminum housing.
- 2-5/8" I.D. Slip Fitter Accepts up to 2-1/2" Pipe or Tenon.
- Corrosion resistant electrocoat dark bronze finish. (custom colors available)
- Post-top mounting system incorporates stainless steel hardware.
- Correlated Color Temperature of (5000°K) for greater visibility and safety.
- High Output COB LED's.
- Driver with built in Neptun Surge Protective Device (NSPD) provides single phase protection for Line/Neutral, Line/Ground, and Neutral/Ground in accordance with IEEE C62.41 C High (10kV & 10kA).
- InstantON flicker-free Cold Start and Hot Re-Start.
- Up to 15 years Maintenance free operation.
- 5 Year Warranty on complete fixture. (LED's, Driver, & Housing)
- **Optional**: 0-10V Dimming, Bi-Level Dimming, Wi-Fi Control, Remote Monitoring and ON/ OFF Control, DC 24V Operation - Solar Compatible

ORDERING INFORMATION

Sample Number: LED-835080-UNV-0-10VDIM-850-MDP-GRY
Custom options and accessories available. Please consult factory

Series	Wattage	Voltage	Options	Color Temp	Accessories	Color
LED-835 = Round Post-Top	**040** = 40 W **060** = 60 W **080** = 80 W	**UNV** = 120-277 VAC **347V** = 347 VAC **480V** = 480 VAC **24VDC** = 24 VDC	**0-10VDIM** = 0-10V Dimming **BL-DIM** = Bi-Level Dimming * * Includes Pole Mounted Motion Sensor ** Contact Factory for dimming options	**835** = 3500°K **841** = 4100°K **850** = 5000°K * * Standard	**MDP** = Pole Mounted Motion Sensor ON/OFF	**BRZ** = Bronze * Custom Colors Available

RoHS LEAD FREE COMPLIANT

lightinnovations@work™

NEPTŪN LIGHT

LED
ARCHITECTURAL POST-TOP AREA FIXTURES

PRODUCT INFORMATION

Model No.	Description	Rated Watts	Input Watts	Initial Lumens	Universal Line Voltage (VAC)	Max Line Current (Amp) @ 120 - 277	THD	Power Factor	Weight
LED-835040-UNV	LED Round Area Fixture	40	41	3,800	120-277	0.34 - 0.15	<20%	>0.90	35 lbs
LED-835060-UNV	LED Round Area Fixture	60	61	5,700	120-277	0.52 - 0.22	<20%	>0.90	35 lbs
LED-835080-UNV	LED Round Area Fixture	80	82	7,600	120-277	0.69 - 0.30	<20%	>0.90	35 lbs

SPECIFICATIONS

- Driver ..... Constant Current
- Start Method ..... InstantON
- Hot Re-start ..... InstantON
- Power Supply 350mA
- Driver UL Rating ..... Class 1
- Driver UL Outdoor Rated ..... Wet Location
- Sound Rating ..... Class A
- ANSI Surge Protection ..... IEEE C62.41 C High
- Current Crest Factor ..... 1.5 maximum
- Load Regulation: 5% output current variation across load range
- Line Regulation: 1% output voltage variation across voltage range
- Driver Off-State Draw ..... 0 Watts
- Vibration Compliance 3G
- Universal Input Line Voltage ..... 120-277 VAC
- Input Line Frequency ..... 50/60 Hz
- LED / Driver System Life ..... 75,000 Hrs.
- Lumen Maintenance @50,000Hrs ..... > 70%
- Color Temperature ..... 5,000°K
- Color Rendering Index (CRI) ..... > 80
- Minimum Starting Temperature ..... -40°C
- Maximum Starting Temperature ..... +50°C
- Lumens per Watt ..... > 90
- Shock / Vibration Resistant ..... Yes
- Power Factor ..... > 0.90
- Total Harmonic Distortion ..... < 20%
- Inrush Current Peak ..... < 10 Amp
- FCC Compliance ..... Part 15, Subp. C
- EPA Rating ..... 1.20 ft.^{2}
- Driver IP Rating IP67
- Optics IP Rating IP68
- Warranty ..... 5 Year

MOUNTING OPTIONS

Accepts up to 2-1/2" O.D. Round Tenon or Pole

IOP-RPTR (contact factory)

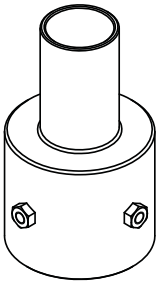

Round Pole Tenon Reducers available for 3", 4", & 5" O.D. Poles

PHOTOMETRICS (See Complete IES File)

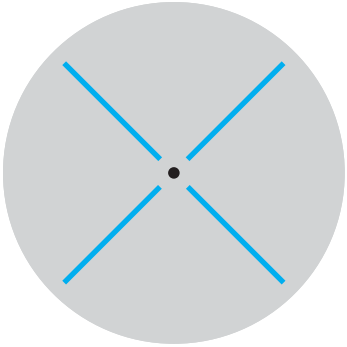

Type V Distribution

Neptun Light, Inc.
13950 Business Center Drive
Lake Forest, IL 60045
Fax: 847.735.8004

Neptun Light, Inc. reserves the right to change materials or modify the design of its product without notification as part of the company's continuing product improvement program.
©2002-2013 Neptun Light, Inc. All rights reserved.

Spec. Rev. 1-2015