NEPTUN LIGHT

# LED
## LINEAR HIGH-BAY FIXTURES
### 3' HIGH OUTPUT

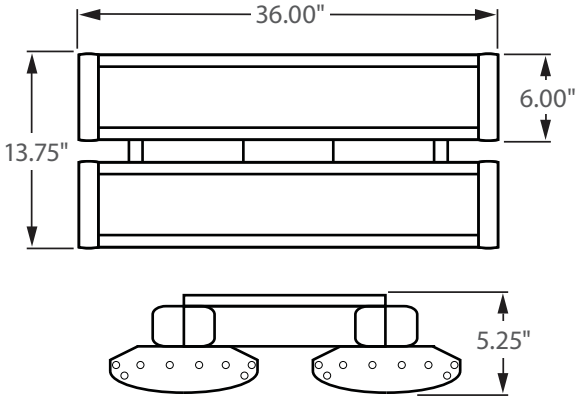


** AVAILABLE **

Bi-Level 100% | Dimming 50%

0 - 10V FULL DIMMING

**Incredible 75,000 hrs**

## GENERAL DESCRIPTION

Neptun's High Output LED Linear High-Bay fixtures combine architectual form and versatility to make it an excellent choice for new construction or retrofit applications. The frosted polycarbonate lens optics allow for an even glow illumintation. It can replace existing HID & HPS fixtures up to 600W.

## APPLICATION

- Warehouse Lighting
- Factory Lighting
- Convention Center Lighting
- Retail Lighting
- Showroom Lighting
- Area & Storage Lighting
- Gymnasium Lighting

## STRUCTURE, MATERIALS, & FEATURES

- Die cast aluminum housing with back finned construction.
- Corrosion resistant electrocoat dark grey finish (custom colors available).
- Frosted polycarbonate lens for even glow ilumination.
- Hanging mount with Gripple hanging system included.
- High power factor, low THD driver with 10kV Surge Protection.
- High performance Thermal Management system.
- Instant-On flicker-free Cold Start and Hot Re-Start.
- Bright white light (5000˚K) for greater visibility and safety.
- High Output LED's.
- Up to 15 year maintenance free operation.
- 5 Year Warranty on complete fixture. (LED's, Driver, & Housing)
- **Optional**: Bi-Level Dimming, 0-10V Dimming, Wi-Fi Control, Remote Monitoring and ON/ OFF Control

## ORDERING INFORMATION

Sample Number: LED-2LH36-180-UNV-BL-DIM-850-MD-C3
Custom options and accessories available. Please consult factory

| Series | Wattage | Voltage | Options | CCT | Accesories | Options |
|---|---|---|---|---|---|---|
| **LED-2LH36** = 3' Linear High Bay | **180** = 180 W<br>**200** = 200 W<br>**240** = 240 W | **UNV** = 120-277 VAC<br>**347V** = 347 VAC<br>**480V** = 480 VAC | **0-10VDIM** = 0-10V Dimming<br>**BL-DIM** = Bi-Level Dimming *<br>* Includes Motion Sensor<br>** Contact Factory for dimming options. | **835** = 3500°K<br>**841** = 4100°K<br>**850** = 5000°K *<br>* Standard | **MD** = Motion Sensor ON/OFF<br>**DLH** = Day Light Harvesting*<br>* Offered with 0-10V Dimming) | **C3*** = 3' Cord-No Plug<br>(other lengths available C6 = 6' cord)<br>**PC3** = 3' Cord with NEMA Plug<br>(verify plug type when ordering)<br>* Standard |

LEAD FREE RoHS COMPLIANT

*lightinnovations@work™*

service@neptunlight.com ■ www.NeptunLight.com ■ 888.735.8330

NEPTUN LIGHT

# LED
## LINEAR HIGH-BAY FIXTURES
### 3' HIGH OUTPUT

## PRODUCT INFORMATION

| Model No. | Description | Rated Watts | Input Watts | Initial Lumens | Universal Line Voltage (VAC) | Max Line Current (Amp) @ 120 - 277 | THD | Power Factor | Weight |
|---|---|---|---|---|---|---|---|---|---|
| LED-2LH36-180-UNV | Linear High Bay Fixture | 180 | 182 | 17,100 | 120-277 | 1.57 - 0.68 | <20% | >0.90 | 25 lbs |
| LED-2LH36-200-UNV | Linear High Bay Fixture | 200 | 202 | 19,000 | 120-277 | 1.74 - 0.75 | <20% | >0.90 | 25 lbs |
| LED-2LH36-240-UNV | Linear High Bay Fixture | 240 | 242 | 22,800 | 120-277 | 2.10 - 0.90 | <20% | >0.90 | 25 lbs |

## SPECIFICATIONS

- Driver ..... Constant Current
- Start Method ..... InstantON
- Hot Re-start ..... InstantON
- Power Supply ..... 350mA
- Driver UL Rating ..... Class 1
- Driver UL Outdoor Rated ..... Wet Location
- Sound Rating ..... Class A
- ANSI Surge Protection ..... IEEE C62.41 C High
- Driver Off-State Draw ..... 0 Watts
- Universal Input Line Voltage ..... 120-277 VAC
- Input Line Frequency ..... 50/60 Hz
- LED / Driver System Life ..... 75,000 Hrs.
- Lumen Maintenance @50,000Hrs ..... > 70%
- Color Temperature ..... 5,000°K
- Color Rendering Index (CRI) ..... > 80
- Minimum Starting Temperature ..... -40°C
- Maximum Starting Temperature ..... +50°C
- Lumens per Watt ..... > 90
- Shock / Vibration Resistant ..... Yes
- Power Factor ..... > 0.90
- Total Harmonic Distortion ..... < 20%
- Inrush Current Peak ..... < 10 Amp
- FCC Compliance ..... Part 15, Subp. C
- Housing IP Rating ..... IP54
- Driver IP Rating ..... IP67
- Warranty ..... 5 Year

## MOUNTING OPTIONS

**Hanging Mount**
**Gripple Hangers Included**

## PHOTOMETRICS (See Complete IES File)

Polar Graph
Neptun Light, Inc.
LED-2LH36-240-UNV-850

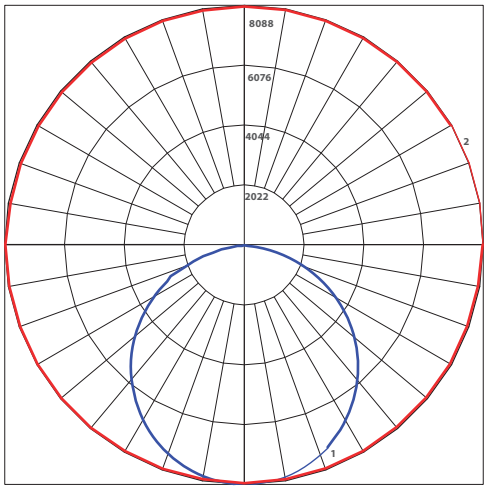


Maximum Candela = 8088.6
Located At Horizontal Angle = 0, Vertical Angle = 2.5
#1 - Vertical Plane Through Horizontal Angles (0-180) (Through Max. Cd.)
#2 - Horizontal Cone Through Vertical Angle (2.5) (Through Max. Cd.)


Neptun Light, Inc.
13950 Business Center Drive
Lake Forest, IL 60045
Fax: 847.735.8004



Neptun Light, Inc. reserves the right to change materials or modify the design of its product without notification as part of the company's continuing product improvement program.
©2002-2013 Neptun Light, Inc. All rights reserved.


Spec. Rev. 1-2015